pompe a 3 pistoni 3-plunger pumps

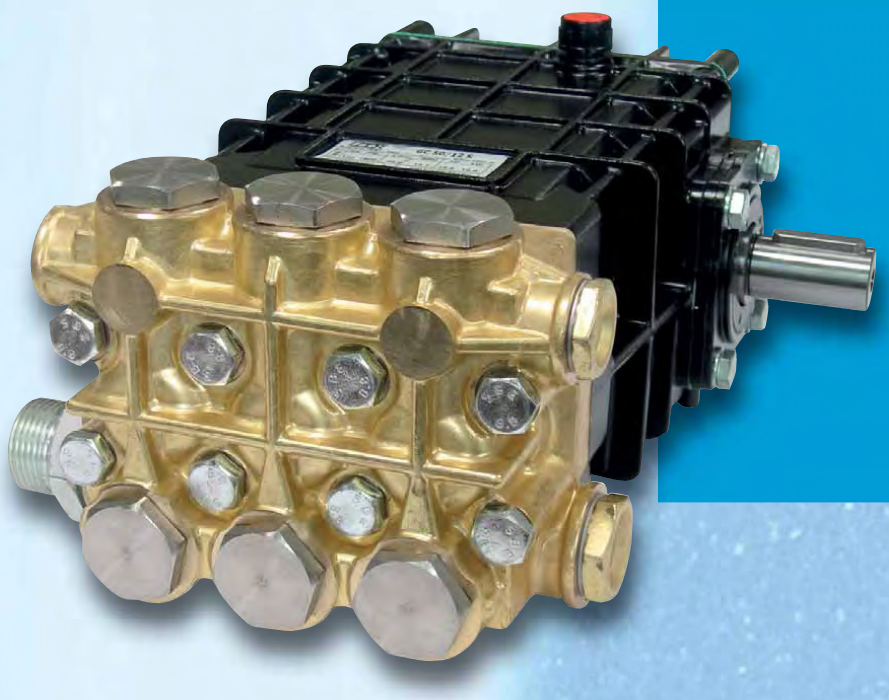

RPM	MODELLO *MODEL*	PORTATA *FLOW*		PRESSIONE *PRESSURE*		POTENZA *POWER*		PESO *WEIGHT*	
		l/min	GPM	bar	PSI	HP	kW	Kg	
1000	GB 26/20 S	26.0	6.9	200	3000	13.3	9.8	16.1	S = Albero Maschio 24 mm *S = Male Shaft 24 mm*
	GB 30/20 S	30.0	7.9	200	3000	15.4	11.3	16.1	
	GB 34/20 S	34.0	9.0	200	3000	17.4	12.8	16.1	
1450	GC 38/15 S	38.0	10.0	150	2200	14.6	10.7	16.1	S = Albero Maschio 24 mm *S = Male Shaft 24 mm*
	GC 42/14 S	42.0	11.1	140	2000	15.1	11.1	16.2	
	GC 50/12 S •	50.0	13.2	120	1800	15.4	11.3	16.2	
1750	GD 9.5/25 S	36.0	9.5	170	2500	15.7	11.5	16.1	S = Albero Maschio 24 mm *S = Male Shaft 24 mm*
	GD 11.0/22 S	41.5	11.0	150	2200	16.0	11.7	16.2	
	GD 12.0/20 S •	45.5	12.0	140	2000	16.3	12.0	16.2	

• Minimo 0.1 bar (1.5 PSI) di pressione in entrata / Min. 0.1 bar (1.5 PSI) inlet pressure
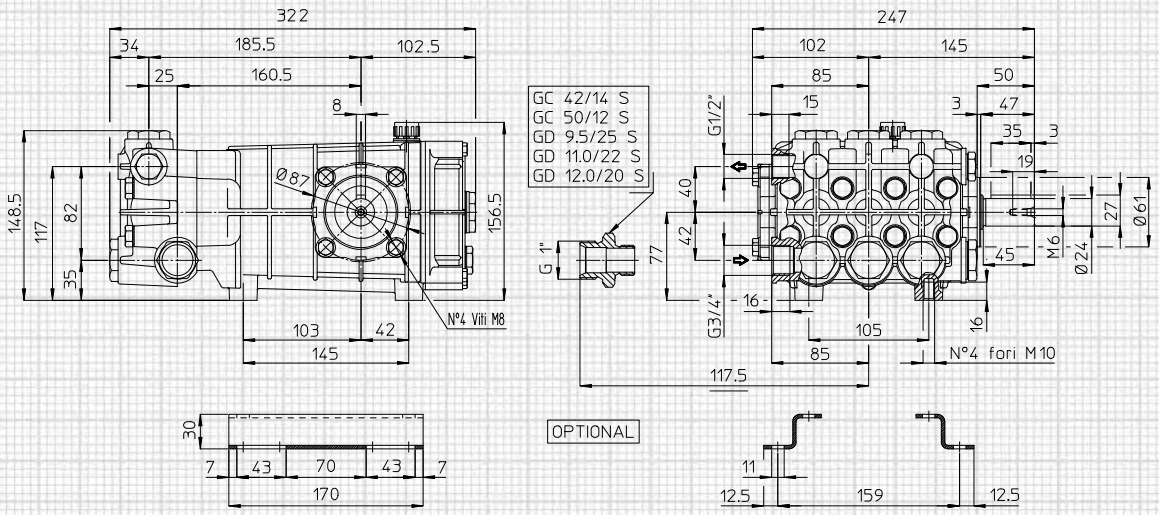
Dimensioni d'ingombro (mm) - *Overall Dimensions (mm)*